AD-A161 839 CURRENT TRENDS TOWARD THE IMPROVEMENT OF SCIENTIFIC INSTRUMENTS FOR WEATH..(U) FOREIGN TECHNOLOGY DIV WRIGHT-PATTERSON AFB OH K Y KONDRAT'YEV 07 NOV 85 1/1

UNCLASSIFIED FTD-ID(RS)T-0728-85 F/G 4/2 NL

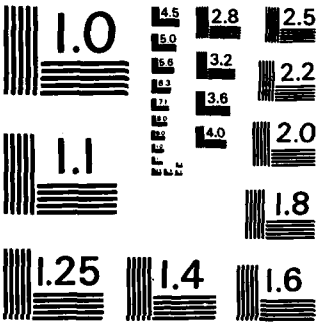

MICROCOPY RESOLUTION TEST CHART
NATIONAL BUREAU OF STANDARDS - 1963 - A

FTD-ID(RS)T-0728-85

FOREIGN TECHNOLOGY DIVISION

CURRENT TRENDS TOWARD THE IMPROVEMENT OF SCIENTIFIC INSTRUMENTS FOR WEATHER SATELLITE APPLICATION

by

K. Ya. Kondrat'yev

AD-A161 839

DTIC FILE COPY

DTIC
ELECTE
DEC 2 1985
S D
A

Approved for public release;
distribution unlimited.

85 11 29 093

FTD-ID(RS)T-0728-85

EDITED TRANSLATION

FTD-ID(RS)T-0728-85 7 Nov 85

MICROFICHE NR: FTD-85-C-001064

CURRENT TRENDS TOWARD THE IMPROVEMENT OF SCIENTIFIC INSTRUMENTS FOR WEATHER SATELLITE APPLICATION

By: K. Ya. Kondrat'yev

English pages: 13

Source: Meteorologiya i Gidrologiya, Nr. 3, March 1973, pp. 107-112

Country of origin: USSR
Translated by: FLS, INC.
F33657-85-D-2079
Requester: FTD/WE
Approved for public release; distribution unlimited.

...ion For
CRA&I ☑
TAB ☐
...unced ☐
...ication
...ution/
...ability Codes
Dist | Avail and/or Special
A-1

QUALITY INSPECTED 3

THIS TRANSLATION IS A RENDITION OF THE ORIGINAL FOREIGN TEXT WITHOUT ANY ANALYTICAL OR EDITORIAL COMMENT. STATEMENTS OR THEORIES ADVOCATED OR IMPLIED ARE THOSE OF THE SOURCE AND DO NOT NECESSARILY REFLECT THE POSITION OR OPINION OF THE FOREIGN TECHNOLOGY DIVISION.

PREPARED BY:

TRANSLATION DIVISION
FOREIGN TECHNOLOGY DIVISION
WP.AFB, OHIO.

U. S. BOARD ON GEOGRAPHIC NAMES TRANSLITERATION SYSTEM

Block	Italic	Transliteration	Block	Italic	Transliteration
А а	*А а*	A, a	Р р	*Р р*	R, r
Б б	*Б б*	B, b	С с	*С с*	S, s
В в	*В в*	V, v	Т т	*Т т*	T, t
Г г	*Г г*	G, g	У у	*У у*	U, u
Д д	*Д д*	D, d	Ф ф	*Ф ф*	F, f
Е е	*Е е*	Ye, ye; E, e*	Х х	*Х х*	Kh, kh
Ж ж	*Ж ж*	Zh, zh	Ц ц	*Ц ц*	Ts, ts
З з	*З з*	Z, z	Ч ч	*Ч ч*	Ch, ch
И и	*И и*	I, i	Ш ш	*Ш ш*	Sh, sh
Й й	*Й й*	Y, y	Щ щ	*Щ щ*	Shch, shch
К к	*К к*	K, k	Ъ ъ	*Ъ ъ*	"
Л л	*Л л*	L, l	Ы ы	*Ы ы*	Y, y
М м	*М м*	M, m	Ь ь	*Ь ь*	'
Н н	*Н н*	N, n	Э э	*Э э*	E, e
О о	*О о*	O, o	Ю ю	*Ю ю*	Yu, yu
П п	*П п*	P, p	Я я	*Я я*	Ya, ya

*ye initially, after vowels, and after ъ, ь; e elsewhere.
When written as ё in Russian, transliterate as yё or ё.

RUSSIAN AND ENGLISH TRIGONOMETRIC FUNCTIONS

Russian	English	Russian	English	Russian	English
sin	sin	sh	sinh	arc sh	$\sinh^{-1}$
cos	cos	ch	cosh	arc ch	$\cosh^{-1}$
tg	tan	th	tanh	arc th	$\tanh^{-1}$
ctg	cot	cth	coth	arc cth	$\coth^{-1}$
sec	sec	sch	sech	arc sch	sech^{-1}
cosec	csc	csch	csch	arc csch	csch^{-1}

Russian	English
rot'	curl
lg	log

GRAPHICS DISCLAIMER

All figures, graphics, tables, equations, etc. merged into this translation were extracted from the best quality copy available.

CURRENT TRENDS TOWARD THE IMPROVEMENT OF SCIENTIFIC INSTRUMENTS FOR WEATHER SATELLITE APPLICATION

K. Ya. Kondrat'yev
Member-correspondent, Academy of Sciences, USSR

A survey is given of the major trends and results in the development of weather satellite instrumentation designed to resolve inverse problems on-board the spacecraft. The discussion focuses on spacecraft similar to the American TIROS-M and ITOS weather satellites.

The successful development of atmospheric imaging methodology has brought about a new generation of weather satellites capable of providing quantitative data concerning temperature, humidity, and other important meterological information [1, 2]. Testing of instrument prototypes for temperature imaging has resulted in improved (optimized) and simplified instrument models for weather satellite application. Analysis of recorded binary television data has led to the conclusion that it is advisable that changes be made concerning the televised scanning radiometry. These changes center around the precise instrument calibration needed to obtain absolute sharpness in the field of view at various parts of the spectrum. Such data lend themselves to the quantitative analysis of imaging and permits its qualitative interpretation. These trends, as noted

above, are resulting in the improvement of on-board scientific instrumentation for operational weather satellite application.

The USA currently operationally employs the "TIROS-M" weather satellite, TIROS modifications, and ITOS series spacecraft [4]. Mid-1972 was designated for the launching of the "ITOS-D,E,F,G"-series weather satellites designed for quantitative data transmission. Initial improvement of this series spacecraft's on-board scientific instrumentation and its sequential memory capability consisted of a change in the television scanning radiometry equipment, removal of the hemispherical radiometers utilizing a receiver plane surface, and the installation of vertical temperature profile capable radiometer. As before, the acute angle scanning radiometer was retained with the solar proton monitor [6]. All instrumentation was doubled for a back-up capability.

The "ITOS-D--G" spacecraft are placed in a solar synchronous orbit at an altitude of 1464 km using the two-stage "Delta" rocket. The quasipolar orbit is at an inclination of 101.7 degrees with one orbit taking 115.14 minutes. Thermal control and design and stabilization methodology work on the "ITOS" series continues to proceed with a new improved guidance system modification completed). Some instrument characteristics shall be examined below [6].

Scanning Radiometer

A two-channel scanning radiometer (DCR) is equipped with an electrical scanning mirror 1 (with an area of 100.4 cm^2) and is mounted at a 45 degree angle relative to the rotational axis and revolving at 48 rpm. A Cassegrainian telescope 3 functions as the focusing system (Fig. 1.). The beam splitter 9 directs a part of the radiated emission (that which passes through the beam splitter itself) at a bolometer 5 (with an infrared channel possessing a

look-angle of 5.3 microrad). The remaining emission is reflected (through a visible frequency channel with a field of view of 2.8 microrad) onto a silicon photo resistor 8. The infrared channel has an interval wave length sensitivity of 10.5-12.5 μm; the visible frequency channel, 0.5-0.7 μm (with plans to change this to 0.4-1.1 μm in order to achieve improved contrast between land and water). An earth image is obtained by scanning in a direction perpendicular to the orbital plane and spacecraft flight path.

The infrared channel has a usable spatial strip of 7.5 km at the ground trace point. The scanning strips overlap and contact at this point during a nadir angle. Near the equator, the strip contact is only 1670 km from the ground trace point, a figure that corresponds to a zenith distance of 60 degrees (when the field of view is 15x22 km). The visible frequency channel has a usable strip of 4 km and on the sector of contact of the scanning strips in the zone of the equator (1385 km from the ground trace point) an element of the image comprises 7.5x15 km (in the ground trace point near the equator there is a "break" of strips, reaching 4 km, which, however, is not noticeable on the image). The calibration of both radiometry channels is accomplished during each scanning strip pass. Data on the infrared channel, during a bolometer temperature of 25°C and a background temperature of 300°C, have a contrast threshold sensitivity of some 2 to 3°C. If the background temperature drops to 185° K, the contrast threshold sensitivity deteriorates some 8-10°C.

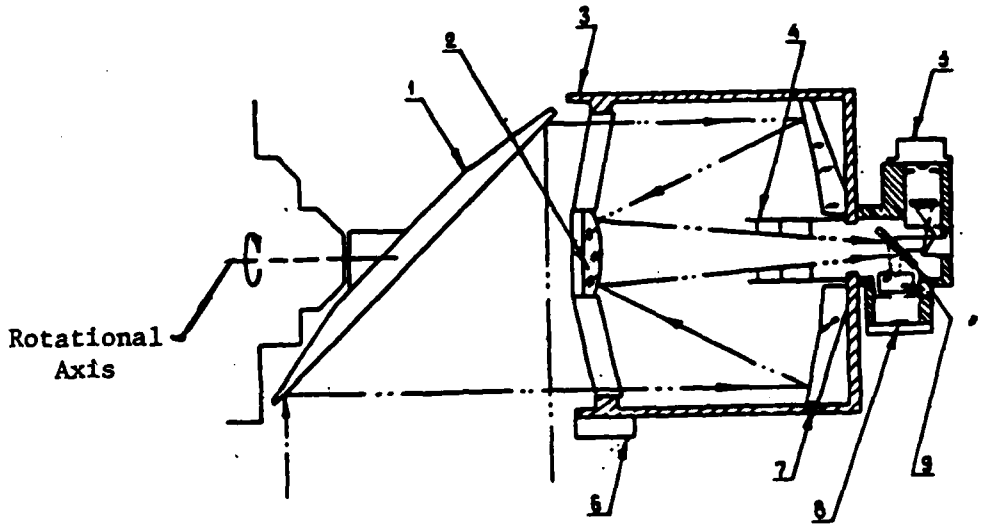

Fig. 1. Optical schematic for two-channel scanning radiometer.
Key: (1) Scanning mirror; (2) Secondary mirror; (3) Telescope housing; (4) Diaphram; (5) Bolometer; (6) Pumping mirror; (7) Primary mirror; (8) Photodiode; (9) Beam splitter.

In order to ease the process of recording data transmitted by the spacecraft during a direct transmission mode (NPD), a DSR is employed to ensure a unified informational flow. During this mode, data from one channel are transmitted while the scanning mirror undergoes its 180 degree rotation (a period of 0.625 seconds). The second channel is used to transmit data during the remaining 0.625 seconds if there is a transmittance window available. If not, the data are recorded onto a magnetic tape and played-back later during a period of 0.625 seconds. All transmissions during the NPD mode are conducted at a frequency of 137.62 and 137.5 MHz.

High-Resolution Radiometer

A high-resolution, two-channel (10.5-12.5 μm and 0.6-0.7 μm) scanning radiometer (DSRVR) is in many ways similar to a DSR, but employs an additional focusing system (based on the Dahl-Kirkheim system) and utilizes a scanning mirror which rotates at 400 rpm.

The angle of version for both channels is 0.6 mrad,

a situation which ensures a 0.9 km spatial image allowance at the ground trace point. A mercury-cadmium-tellerium-photo-resistor serves as the infrared receiver and is cooled to 105°K. As in the case of the DSR, the DSRVR data is transmitted in the NPD mode, but at a frequency of 1697.5 MHz. This differentiation stems from the fact that the data for the visible frequency channel is not recorded onto a magnetic tape. Instead, two DSRVRs function simultaneously (180 degrees out of phase) and alternately transmit data by way of the infrared and visible frequency channels (nonsynchronous data inspire a shift of some 8 km, which was anticipated and compensated for at the surface in order to reduce error to less than 4 km). Contrast threshold sensitivity on the infrared channel equals 1.5-2°C and is between 6 and 8°C during background temperatures of 300 and 185°K, respectively.

Vertical Temperature Profile Radiometer

An 8-channel radiometer for determining vertical temperature profiles (RVPT) is designed to measure radiation drift at interval wave lengths of 11-19 μm. Table 1 depicts the characteristics of RVPT channels.

Table 1. RVPT Channel Characteristics

Channel	Wave Number	Band Width	Application
1 (Q-Phase)	668.5	7.0+0.5	Hydrocarbon gas
	695	10.0+2.5	Hydrocarbon gas
	725	10.0+1.0 -2.0	Hydrocarbon gas
4	535	10.0+1.0 -2.0	Water Vapor
5	835	8.0+1.0 -2.0	Transmittance Window
	747	10.0+2.5	Hydrocarbon gas
	708	10.0+2.5	Hydrocarbon gas
	677	10.0+2.5	Hydrocarbon gas

As the table indicates, six of the eight radiometer channels

As the table indicates, six of the eight radiometer channels are located within the boundaries of 15 μm, the carbon gas bands. Data for the channel located within the boundaries of the orbital water vapor band (535 cm^{-1}), are designated as corrective factors for the measurement of other channels while taking the presence of water vapor into account. Measurement data for the atmosphere's transmittance window are used to determine the temperature beneath the upper cloud strata.

RVPT was first developed by the "Barnes" Corporation (Fig. 2), which provided a unified optical system that spanned all channels and which incorporated a pyroelectric emission receiver. Disk 1 has 8-power light filters deployed in front of the emission receiver which rotates at 120 rpm. Each of the light filters within the receiver's field of vision during the 62.5 μs period and allow the vertical temperature profile to be determined each 0.5 seconds. RVPT appears to be a graduated-scanning of the area of $\pm$ 31.45 degrees relative to the nadir angle (with 23 scanning sweeps). Scanning at read-out with satellite orbital flight taken into account is accomplished everywhere except the equator where gaps remain in the sequential strip coverage of this area. The instrument field of view (2.235X2.235 degrees) provides a spatial image allowance at the ground trace point of some 59X59 km during which it takes a period of 12.5 seconds to scan a strip lengthwise (the scanning strip is 54x1364 km).

RVPT allows an absolute measurement accuracy of better than 0.5% and a relative accuracy of 0.125% (with the exception of channel No.1. where it is equal to .25%). Accuracy is ensured through frequent calibrations for absolute sensitivity control and linearity. The calibration procedure involves aiming the radiometer into space ($4^{o}K$) for a period of 16 seconds following which it is aimed for 15 seconds at a dark body with a temperature of $285^{o}K$. The acquisition of analogous data was accomplished in

advance of the digital transmission of recorded data (10 bit). RVPT data is designed for central data reception utilization.

In June of 1970, aircraft testing of the RVPT prototype [7] was begun. The main goals of the testing were to: 1) obtain data for checking the method used to determine clear-column radiance as well as the corresponding vertical temperature profile during the presence of partial cloudiness in the frequency view channel for the instrument's field of view; 2) use measurement data for a cloudless atmosphere to determine the nature of atmospheric transmittance corresponding to the RVPT channel, 3) use measured data obtained for cloudy conditions to determine spectral transmittance characteristics of cloud radiance. Ten flights were conducted with a "Conveyor-990" aircraft over different terrain (desert, mountain, prairie, oceans, ice fields) and over a wide latitude (28-80 degrees) as well as under various weather conditions. The aircraft-tested RVPT prototype embodies a 5-channel radiometer (532.5; 898.5; 747.0; 732.5; and 708.0 cm^{-1}), having a 3-degree field of view (with each channel covering an independent focusing system and receiver). On-board calibration of RVPT are conducted using two dark bodies (one hot, one cold). Actual absolute measurement accuracy obtained was about 1%, relative accuracy was 0.5%.

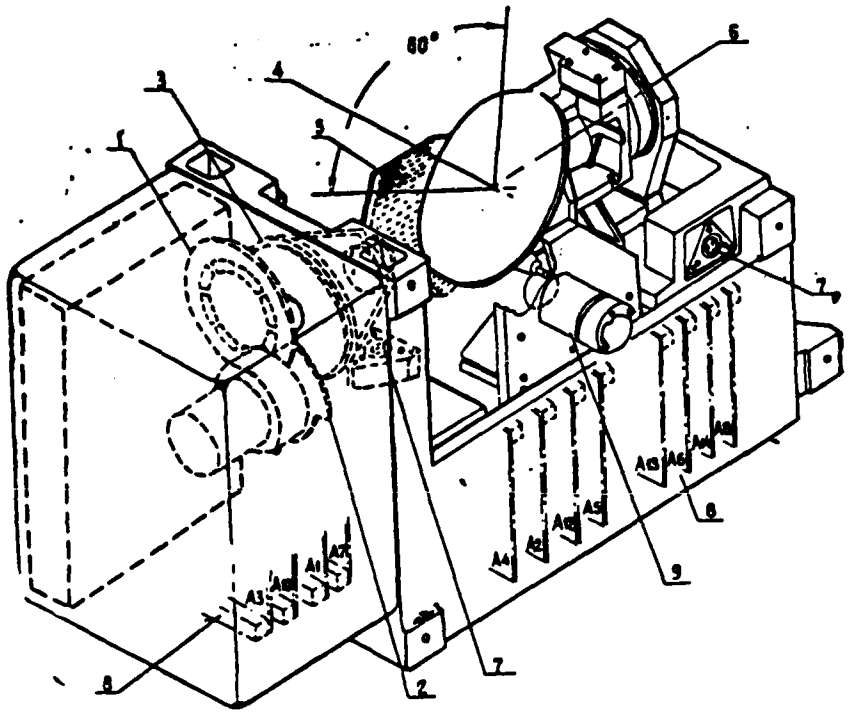

Fig. 2. Eight-channel radiometer for determining vertical temperature profile.
Key: (1) Color-filter disk; (2) Modulator; (3) Primary mirror; (4) Scanning axis; (5) Perfect radiator calibration; (6) Calibration axis; (7) Pumping mirror; (8) Circuitry; (9) Graduated Scanning motor.

Analysis of measurement data indicated that during the presence of partial cloudiness in the instrument's field of view, clear-column radiance can be determined with enough accuracy to establish the vertical temperature profile. During such a situation, clear-column radiance I_{cir} (v) is established according to measurement data for incidence emission at two neighboring points I_1(v) and I_2(v) according to the formula [8]"

$$I_{cir}(\nu) = \frac{I_1(\nu) - NI_2(\nu)}{1 - N}. \quad (1)$$

where

$$N = \frac{N_1}{N_2} = \frac{I_{cir}(\omega) - I_1(\omega)}{I_{cir}(\omega) - I_2(\omega)}. \quad (2)$$

Here N_1 N_2 is equal to the amount of cloud cover in the field of view at neighboring points (it is suggested that radiation is transformed only as a result of changes in the degree of cloud cover, and is not inspired by either the temperature profile or the altitude of the cloud cover itself).

If $I_{cir(w)}$, $I_1(w)$ and $I_2(w)$ - is equal to window channel radiance, elements 1 and 2 are selected so that, $I_1(w) \geqslant I_2(w)$, and this is why $1 \geqslant N \geqslant 0$. It is suggested that the size of $I_{cir}(w)$, is a known quantity and can be determined based upon simultaneous measurement data for radiance decay in the 11 micrometer and 3.7 micrometer transmittance windows [9].

Positive results have been obtained for determining the transmittance function for actual atmospheric conditions employing clear column radiance, and employing an absorption strip model for wide spectral interval transmittance. Similarly, in those parts of the spectrum with water vapor absorption, the transmittance function can be established only during the presence of very accurate data for water vapor content. The absence of such data has made it impossible to determine the transmittance function for two sections of the spectrum where water vapor absorption takes place. Future plans call for the use of satellite-identical instruments on board aircraft flying at the ground trace point as means for checking the validity of the transmittance functions.

Few measurement data were obtained for radiance both within and atop cloud cover, but it is hoped that this data can be utilized for establishing radiance transmission through the clouds themselves.

Solar Flux Monitor (MSP)

This instrument is designed to measure high-energy particles (protons, electrons, etc.): protons in the range of 10, 30, and 60 MeV and electrons in the range of 100-750 KeV. Transmitter groups measure vertically directed particle flows eminating from the sun and flowing along the orbital path.

The "NIMBUS-F"

Exploratory work on improving instrumentation continues especially within the "NIMBUS-F" satellite program. In June 1974, the satellite was being prepared for an 1100 km high, circular, quasi-eliptical orbit (at a 99.96 angle of inclination and an orbit taking 107.3 minutes). This experimental satellite is slated to carry an expanded instrument system [5].

Coordinate drift fixing and scanning equipment, as well as instruments for determining barometric pressure, temperature, humidity, wind speed and direction by means of atmospheric sounding are employed. A 16-channel high-resolution radiometer (with nearly a 25 km field of view) is designed for distant atmospheric sounding at altitudes of up to 40 km. This device has 7 channels in the 15 μm range and 5 channels in the 4.3 μm range for use in hydrocarbon gas belts (all of these channels serve thermal sounding functions), and 2 channels in the transmittance window operating at 11 and 3.8 μm, as well as 2 channels for water vapor belts in the 6.3 μm range.

The "NIMBUS-F" satellite has the capability to transmit data both directly to earth, or by way of geostationary satellite, the "ATE-F". For measuring temperatures at 3 levels, at altitudes of 0-18 km, a microwave radiometer with 2 channels and graduated scanning, operates at 2 frequencies of 22.2 (1.35 cm) and 64.47 (0.465 cm) GHz providing information concerning water and water

scanning radiometer combination is set to ensure the measurement of the solar radiance constant and the "surface-atmosphere" radiance balance component (for a spectrum balance of 0.2-40 μm).

Plans call for certain new methodologies to resolve a series of inverse problems generated by weather satellite technologies. Measurement data for the angular distribution of radiance decay near the edge of the earth's image surface will be used to determine vertical temperature profiles, as well as the water vapor and ozone content in the stratosphere. A 4-channel radiometer with the following channels: 9.4-10; 14.0-16.3; 14.5-16.7; 20-40 μm, is assigned to the above tasks. A 2-channel radiometer (with a 15 μm range in hydrocarbon gas belts) with selective modulation, has been developed for determining temperatures at two different altitudes between 45-70 km. A scanning microwave radiometer operating at 37 GHz (0.8 cm) is slated for use as a corrective in measuring the water content of clouds, in determining ice cover, and for confirming the existence of major land features on the underlying surface. Another 2-channel radiometer (operating in the range of 6.5-7.0 and 10.5-12μm) is capable of providing cloud cover images at any time of day.

Conclusions

The trends outlined above confirm that the major trends in improving weather satellite technology center on the exchange of quantitative information by means of binary television data as well as instrument calibration capable of ensuring absolutely sharp image resolution, a wider microwave range, and distant atmospheric sounding. Since there currently are no indirect methods for determining wind fields and pressure, weather satellites play an important role in studying global sounding drift, and in automatic data transmission and surveying for earth stations and global sounding. Practical weather forecasting needs dictate the

sounding. Practical weather forecasting needs dictate the necessity for the wide application of instantaneous data transmission. This is all the more important when data control and data reliability are considered in terms of knowledge gained concerning the ground trace point system program. Finally, it must be noted that the expansion and improvement of scientific instrument systems for weather satellites must be sharply accelerated and expanded to include the multidisciplinary interpretation of observed data. This goal is not only to improve meterology, hydrology, and oceanography, but also to aid the general study of natural resources and how they relate to the cosmic ecology [3].

Literature

ЛИТЕРАТУРА

1. Кондратьев К. Я., Тимофеев Ю. М. Термическое зондирование атмосферы со спутников. Гидрометеоиздат, Л., 1970.
2. Кондратьев К. Я. Спутниковая метеорология. «Итоги науки». Метеорология и климатология. 1970, ВИНИТИ, 1971.
3. Кондратьев К. Я. Космическая экология.— Метеорология и гидрология, № 5, 1972.
4. Albert, E. G. The Improved TIROS Operational Satellite. ESSA Technical Memorandum NESCTM-7. National Environmental Satellite Service, Suitland, Md., Dec. 1971.
5. Mathews, Ch. W. Opportunities for Participation in Space Flight Investigations. NHB 8030 IA, NASA, Washington, 1972.
6. Schwalb, A. Modified Version of the Improved TIROS Operational Satellite (ITOS D—G). NOAA Techn. Memo. NESS 35, Washington, April 1972.
7. Smith, W. L. et al. The Airborne ITPR Brassboard Experiment. NOAA Techn. Memo. NESS 58, Washington, 1972.
8. Smith, W. L. The Improvement of Clear-Column Radiance Determination with. a Supplementary 3.8 m Window Channel. ESSA Techn. Memo. NESCTM-16, Washington, July 1969.
9. Smith, W. L. and Jacob, W. J. Multi-Spectral Window Detarmination of Surface Temperature and Cloud Properties. 1972.

Transliteration and translation of sources 1-3

1. Kondrat'yev, K. Ya., Timofeyev, Yu. M., Termicheskoye zondirovanie atmosfery so sputnikov (Thermal Atmospheric Sounding from Satellites) Leningrad: Gidrometeoizdat, 1970.

2. Konrat'yev, K. Ya., "Sputnikovaya meterologiya" (Satellite Meterology) "Itogi nuaki" Meterologiya i klimatologiya, 1970 (VINITI) 1971.

3. Kondrat'yev, K. Ya., "Kosmicheskaya ekologiya" ("Cosmic, Ecology")--Meteorologiya i gidrologiya, No. 5, 1972.

END

FILMED

1-86

DTIC